GAZEBO JOE'S®

ASSEMBLY INSTRUCTIONS

# CROWN PAVILION

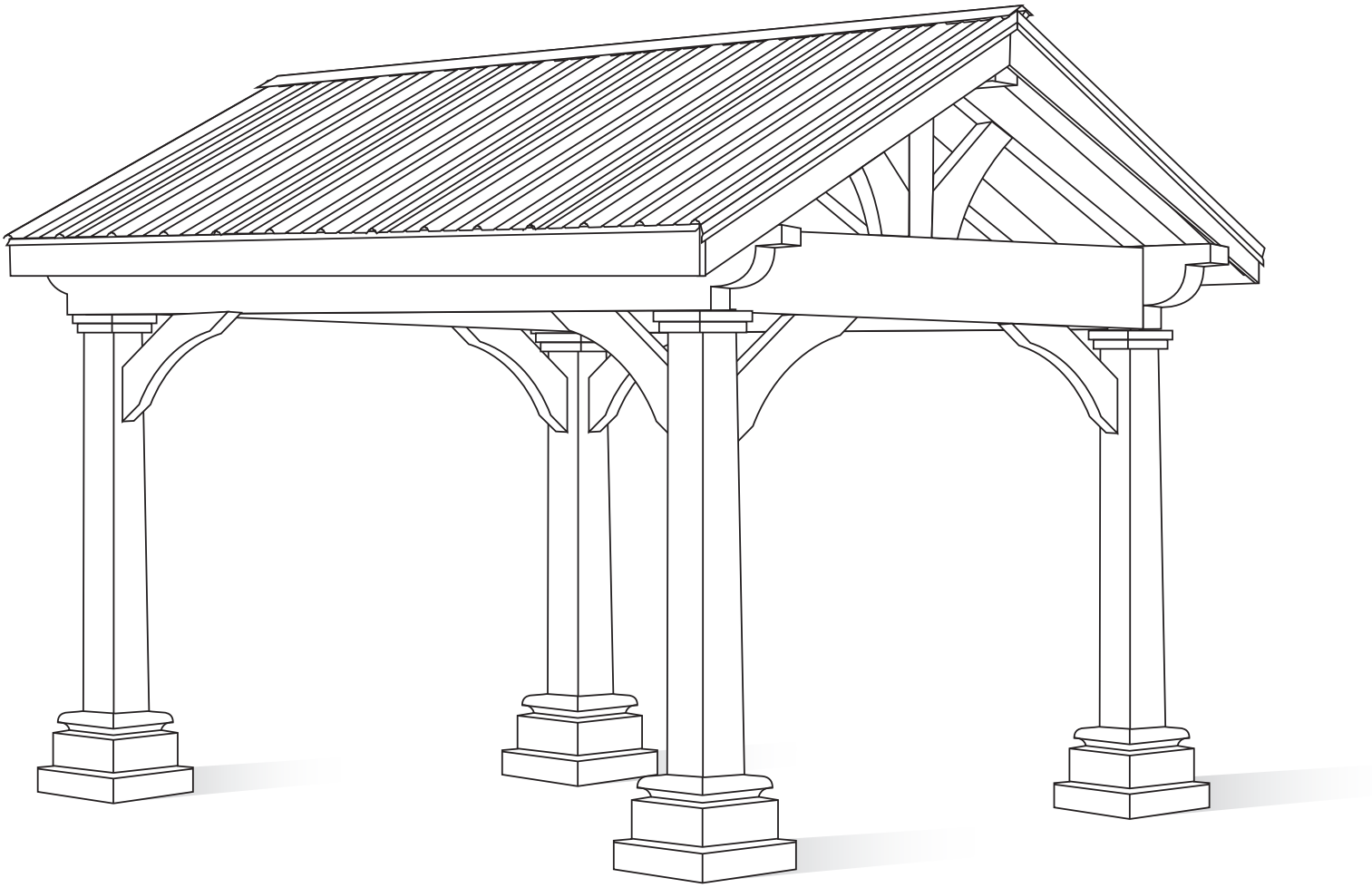

Thank you for the purchase of your new Crown Pavilion. Depending on the size of your structure, installation can usually be completed in one to two days. Additional options may have a bearing on installation.

# Before You Begin

These instructions are meant to serve as a guide for people with a basic knowledge of general handyman skills. This assembly requires a minimum of two people to complete. ***(Extra help with installing the roof sections is suggested.)***

Please always check with your local building codes. These will vary from state to state.

## Tools Needed for Assembly

Screw Gun/Drill, Hammer, Level, Tape Measure, C Clamps, Socket Set, Ladder, Circular Saw, Vinyl Snips

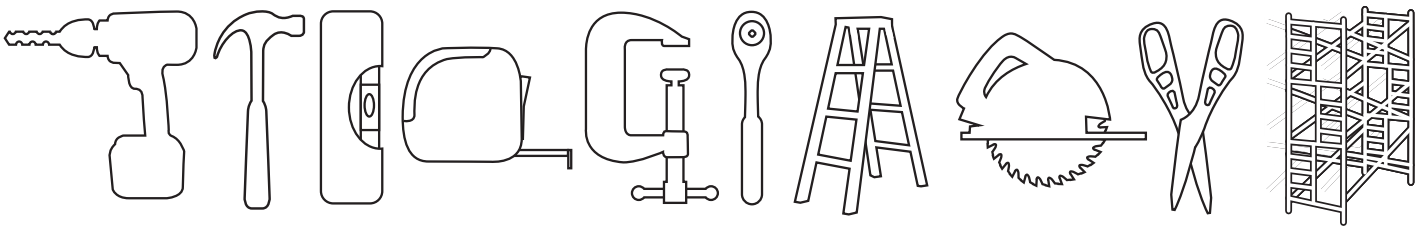

An air-nailer or stapler may be used for roofing material.
**(Air nails and staples are not included in the kit.)**

You will receive a parts list with your pavilion. All hardware is included in each pavilion kit. The specific hardware will vary depending on the pavilion. Please see your parts list for details.

# Site Preparation

Consider a few details before beginning assembly:

The base for the pavilion must be solid and level. If installing on a concrete slab or on concrete footers, they should be level where the posts will rest. If they are not, it may be necessary to cut the bottom of the posts so that the tops are all level. **No cutting is necessary unless noted. If you feel that you will need to make any additional cuts, please contact us before doing so. Making cuts without calling first may make installation difficult or impossible, and can void our warranties.**

**Hardware Included**
(Hardware may vary)

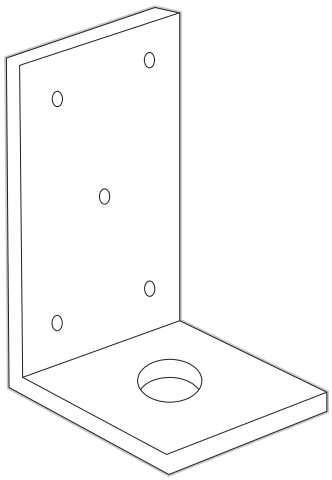

Post Brackets

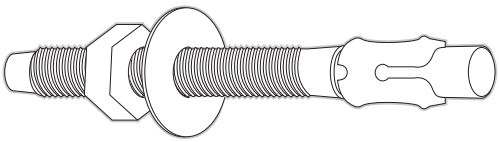

Wedge Anchors

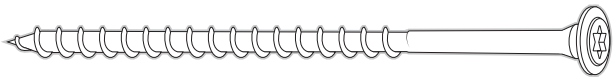

GRK Screws

3½" Screws

2" Screws

2½" Screws

GAZEBO JOE'S®

# Template Assembly

1

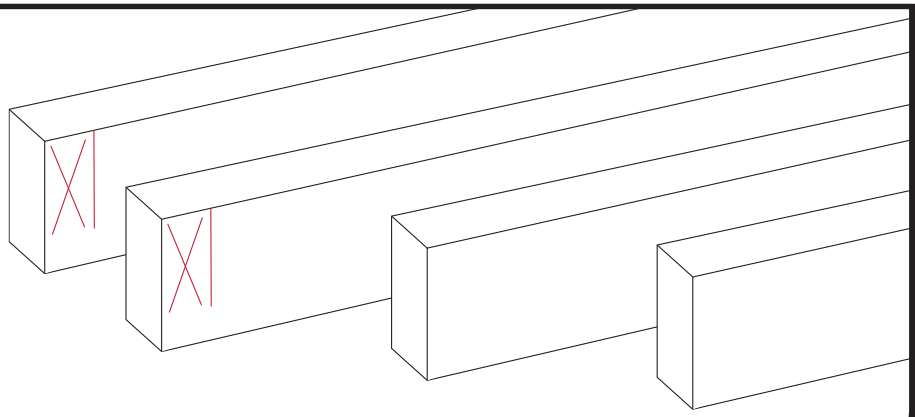

Your pavilion kit includes a wooden template that you will use to mark your post locations. You will notice that two of the 2x4 boards have a marking near the ends. You will build a box that will reveal the outside corners of the posts when properly placed.

2

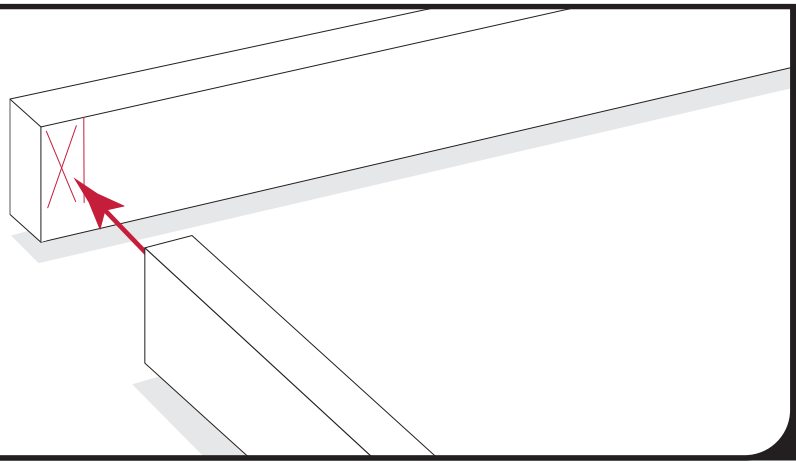

Arrange the template pieces so that they are positioned in the exact location of where your pavilion will be placed. The boards with the marking on the end will be across from each other. The marks will show where the other boards will be attached to create th is box.

3

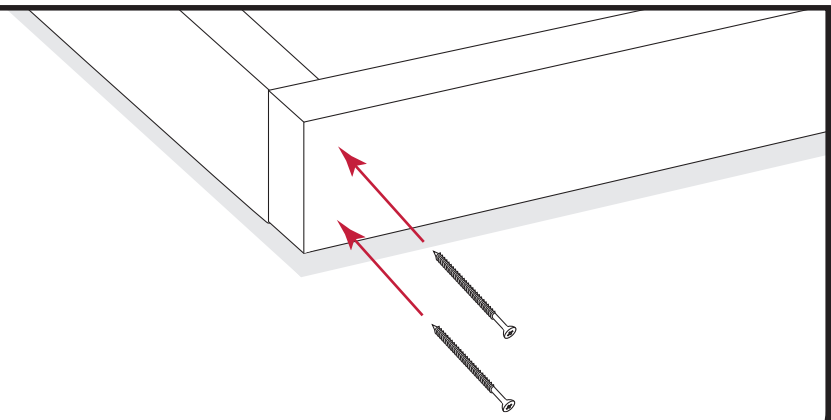

Connect the corners of the template pieces by driving two 2½" screws through the side of the template boards. On larger pavilions, your template will be spliced. Match the letters, then fasten them together with 2½" screws.

## 4

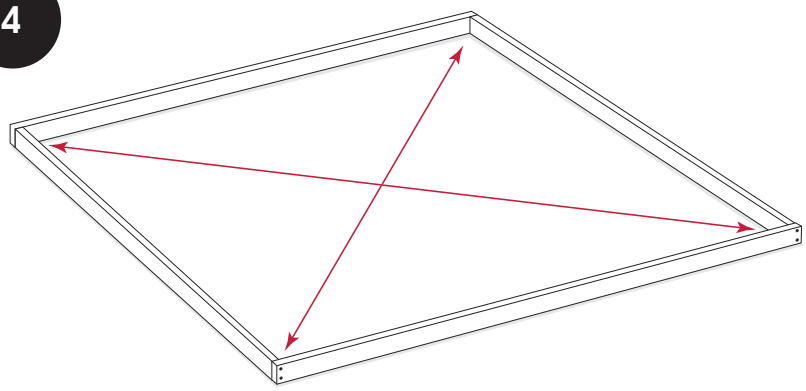

Once the template is in position, you will need to square the template. Do this by measuring diagonally from one corner to its opposite corner. Then measure diagonally between the other two corners. These two dimensions MUST be the same. Adjust the template until the diagonal measurements are identical.

## 5

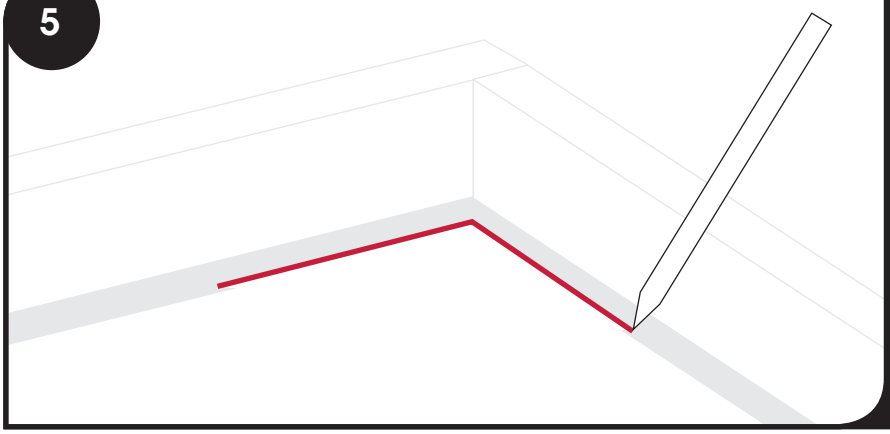

Once the template is "square", mark the post locations (using the INSIDE corners of the framed box) on the concrete slab with a pencil. After you have all the post locations marked on the concrete slab.

**NOTE: If you have more than four posts, please mark per the template.**

## 6

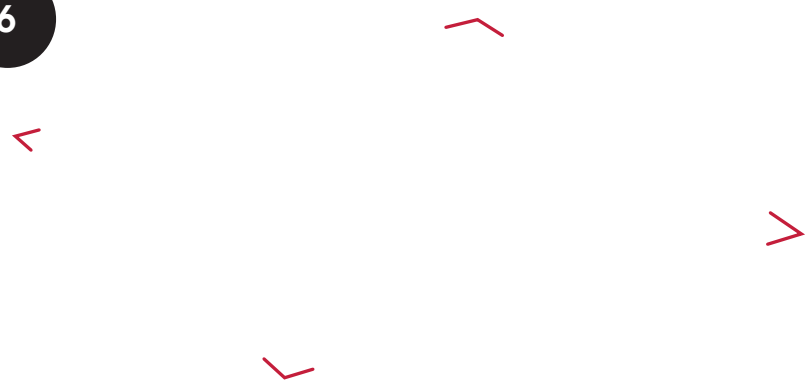

Remove and set the wooden template aside. You are now ready to assemble your pavilion.

GAZEBO JOE'S®

# Assembly

## 1

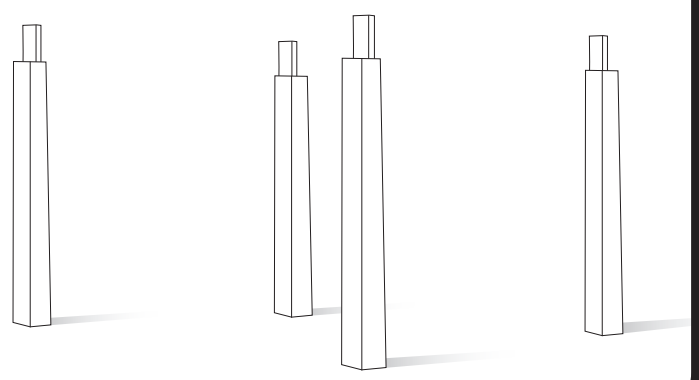

**NOTE: If you ordered a pavilion with heavy duty anchors, please turn to page 12.**

The next step is placing the post at the marks you made with the template. When placing the post, make sure you turn it the correct way. There should be a 3" notch and 1" notch on top of post. The 3" notch gets turned to the outside to receive the header beam.

**NOTE: If you ordered a pavilion with more than four posts, you will have center posts. Make sure you turn the 3" notch toward the outside.**

## 2

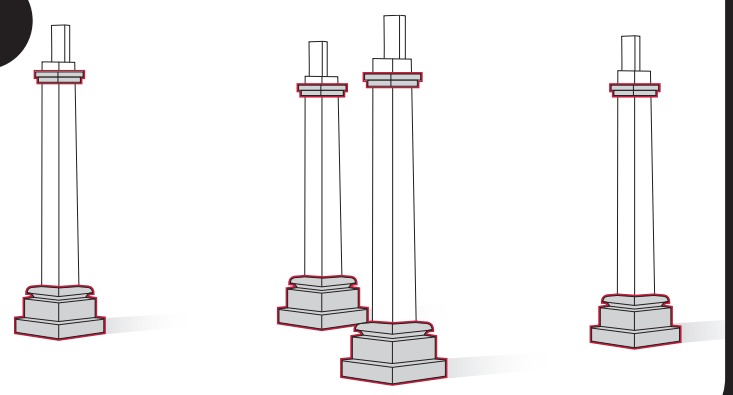

The next step is to put the bottom post base and the top trim ring on.

## 3

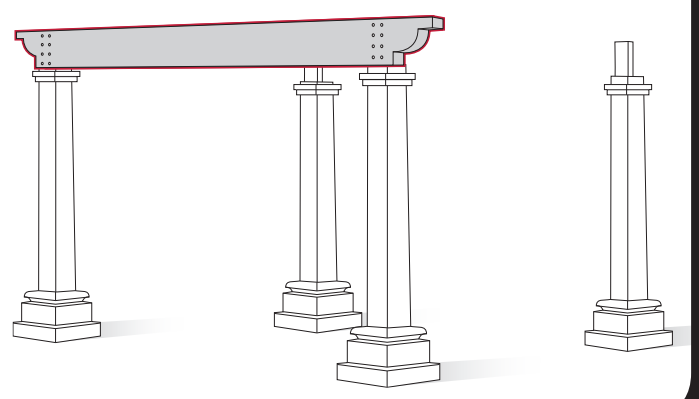

You are now ready to install the header beams. If you do not have a couple extra guys to hold the post, you can use the template. Put it together like you did before. Then just screw it to the top of the post underneath the top post trim. If your template is spliced, add a spare 2x4 approximately 2' long at your splice. Attach with four 2½" screws to give your template more support.

**NOTE: If you ordered a pavilion with more than four posts, your header beam will be spliced for your center post.**

## 4

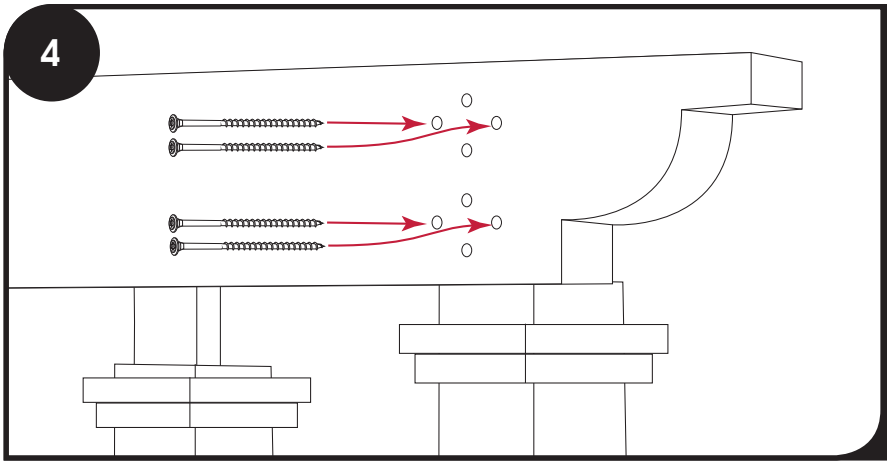

Once you have the header beam up in place, fasten it to the upright post with four ⅜" x 6" GRK screws in each post. Be sure to use the outside set of pre-drilled holes only. Continue with the header on the other side of the structure. Be sure to let the center set of 4 holes empty for this step.

## 5

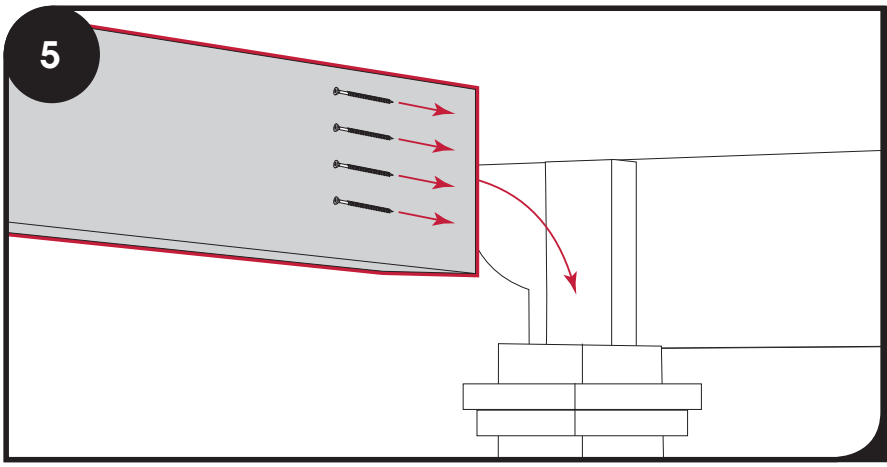

Once you have both long headers up, you are now ready to put the return beams in. Make sure the posts are level and at the marks. Fasten the return beams with four 3½" screws. Four per side.

## 6

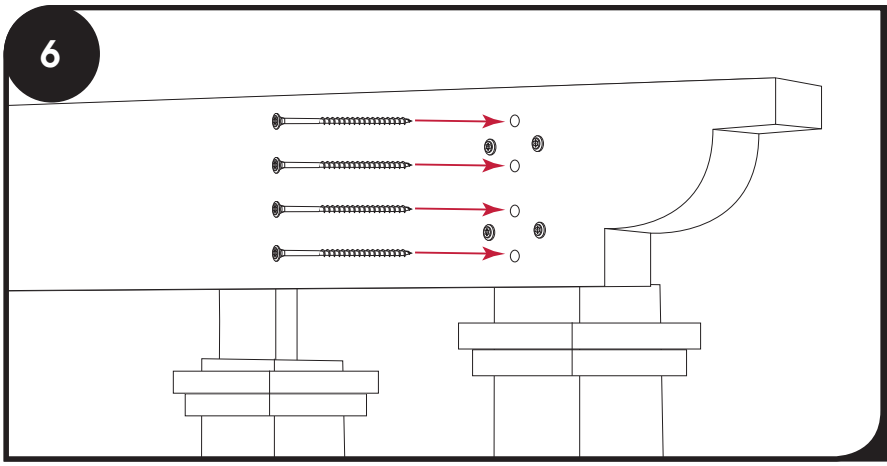

You can now go back and put the remaining four ⅜" x 10" GRK screws in. Use the four center pre-drilled holes.

## 7

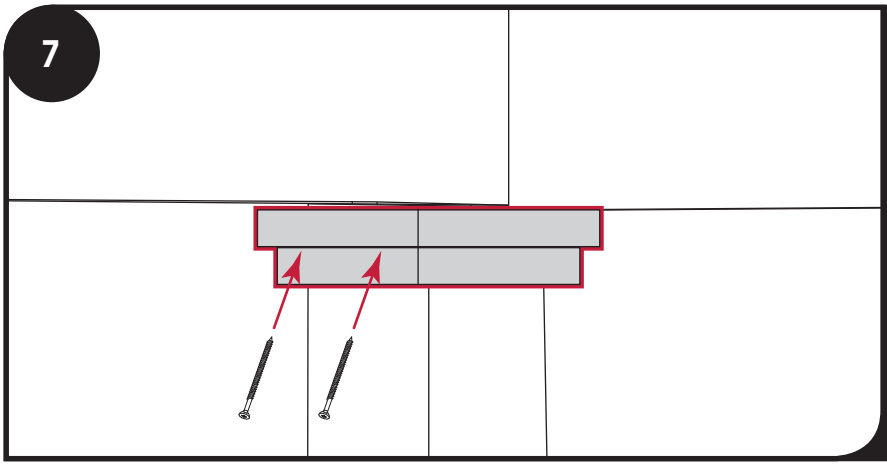

The next step will be fastening the top trim to the bottom of header with two 3½" screws.

GAZEBO JOE'S®

## 8

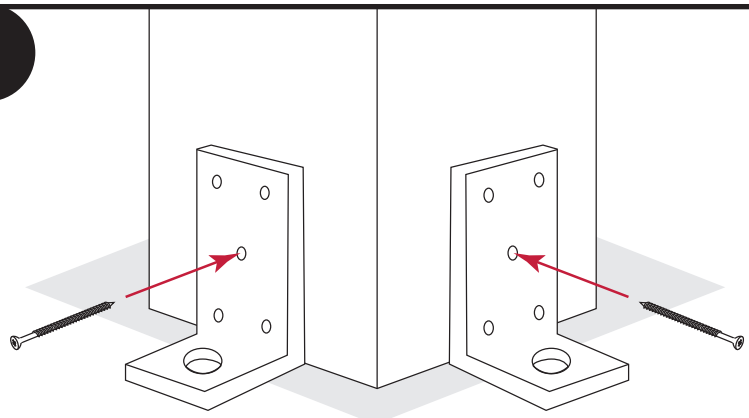

**NOTE: If you ordered heavy duty anchors, please skip this step.**

Lift bottom post base up approximately 16". You can put a screw in to hold it if you want to. Fasten four of the black L brackets to bottom of post with five 2½" screws.

## 9

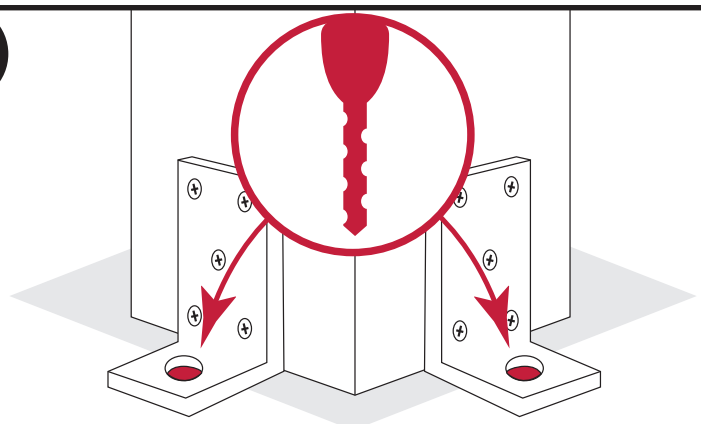

**NOTE: If you ordered heavy duty anchors, please skip this step.**

When you have all the brackets attached to post, use a ½" mason bit and drill down about ½" farther than length of anchor bolt.

## 10

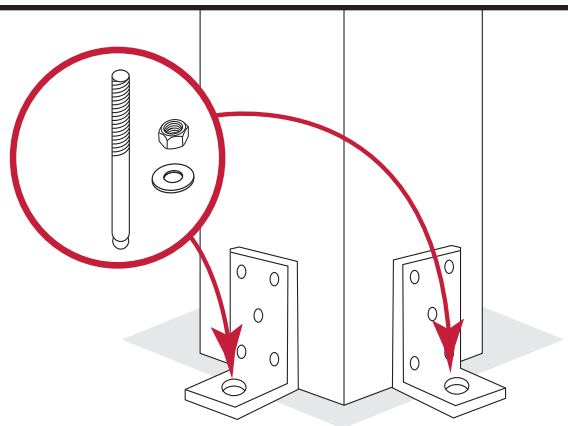

**NOTE: If you ordered heavy duty anchors, please skip this step.**

When holes are all drilled, put the anchor bolts in. Make sure the nut and washer are on. Use a hammer to tap bolt in hole. When you have it down against, tighten nut with a wrench. Do that with all brackets.

## 11

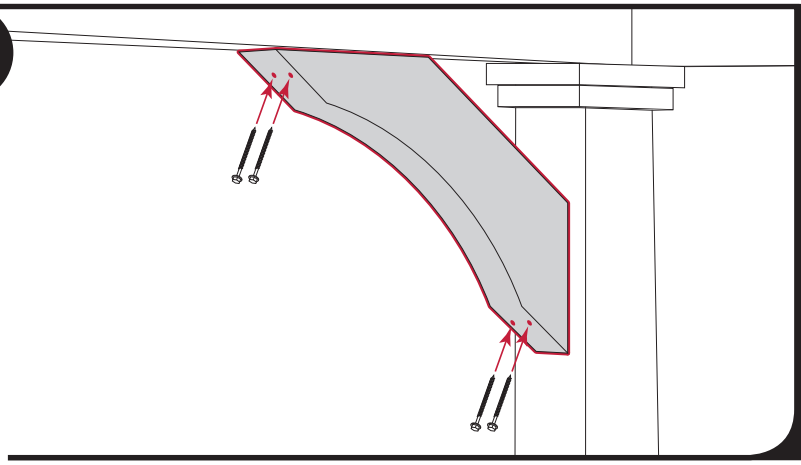

Locate your braces. You'll need two braces per post. Fasten brace to header and post with ⅜" x 6" GRK screws.

## 12

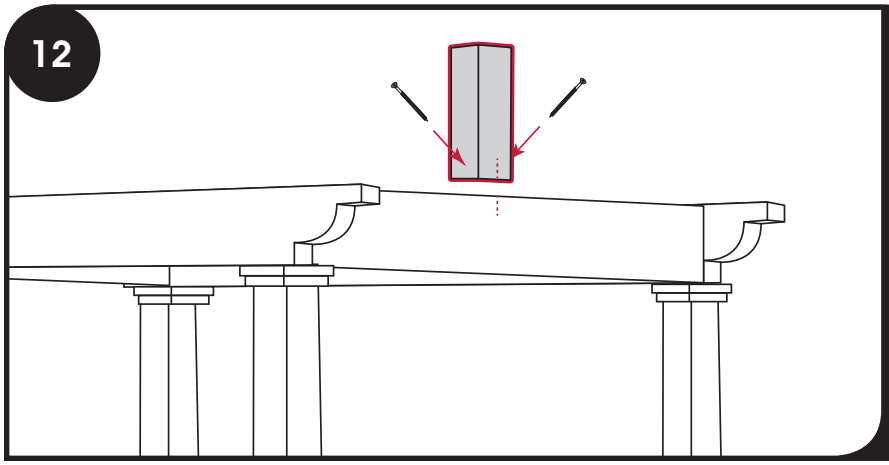

You should be ready to assemble the roof structure now. Locate the two pieces about two to three feet long. These go on top of return beam. There should be a mark on top of return beam. Make sure it is right in the center or your rafters won't fit. Fasten it to return beam with two 3½" screws.

## 13

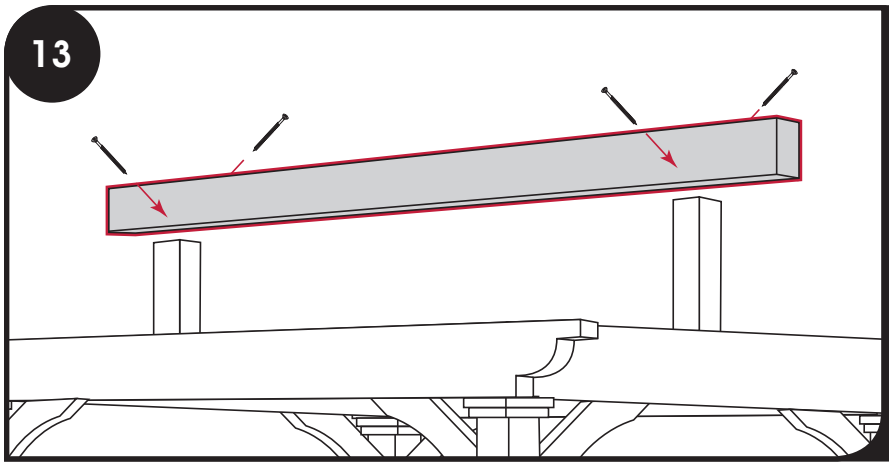

Locate the ridge beam. Make sure the marks on top of ridge beam are turned up. Set it on top of the ridge beam supports. Fasten with two 3½" screws, one on each side.

**If you ordered a pavilion with a return gable, turn to page 14.**

## 14

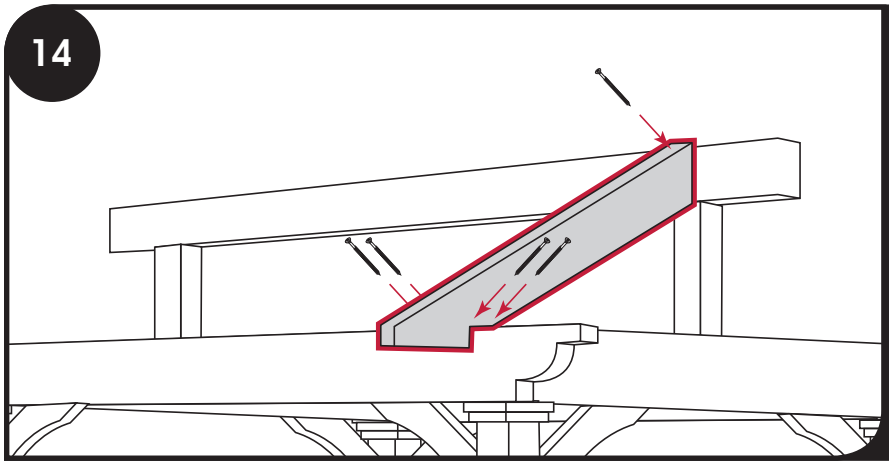

Fasten the rafter to ridge beam with one 3½" screw. Make sure to keep the long point of the rafter flush with the top of the ridge beam. THERE IS A PRE-DRILLED HOLE IN RAFTER. DO NOT USE THAT NOW. Fasten rafter to header with four 3½" screws, two on each side. Make sure rafter sits in tight against header.

## 15

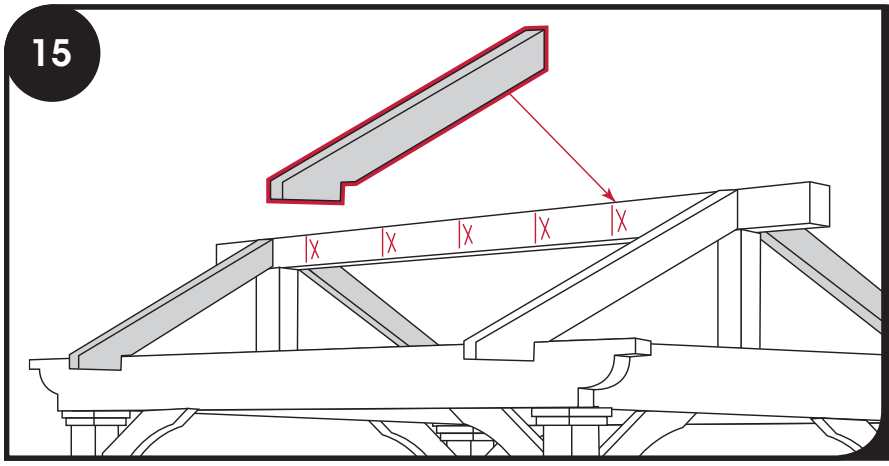


Put the four outside rafters on first. There will be marks on top of headers. Put the rafters on the X. Next begin placing the middle rafters across the structure using the "X" marks for placement.

## 16

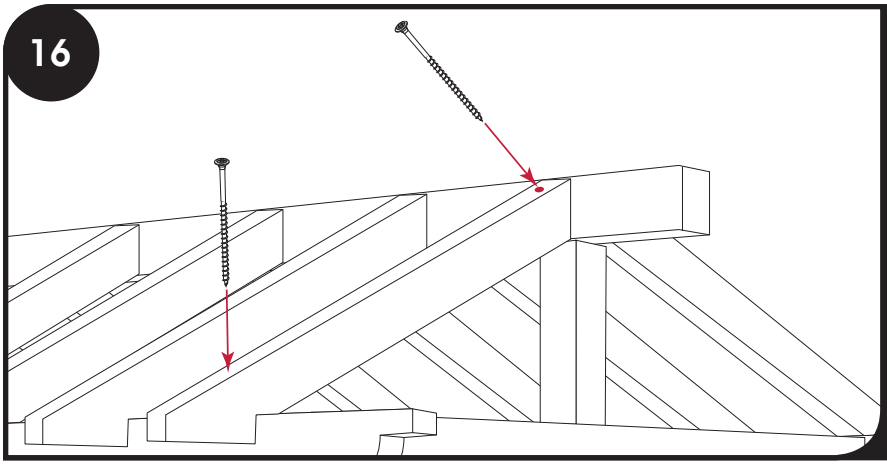

The next step will be the GRK screws. One 5" GRK screw on top of each rafter going into the ridge beam. And one 8" GRK through the rafter and into the header

## 17

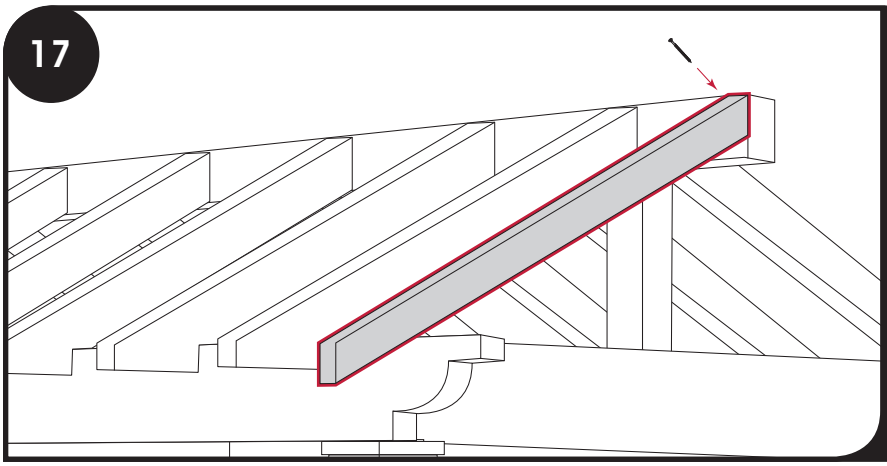

There should be four 2x4 fly rafters the length of the main rafters. Fasten these fly rafters to the end of ridge beam with two 3½" screws. Do not fasten the bottom to header.

NOTE: Measure from the main rafters and make sure your fly rafter is the same distance on the bottom as it is on the top.

## 18

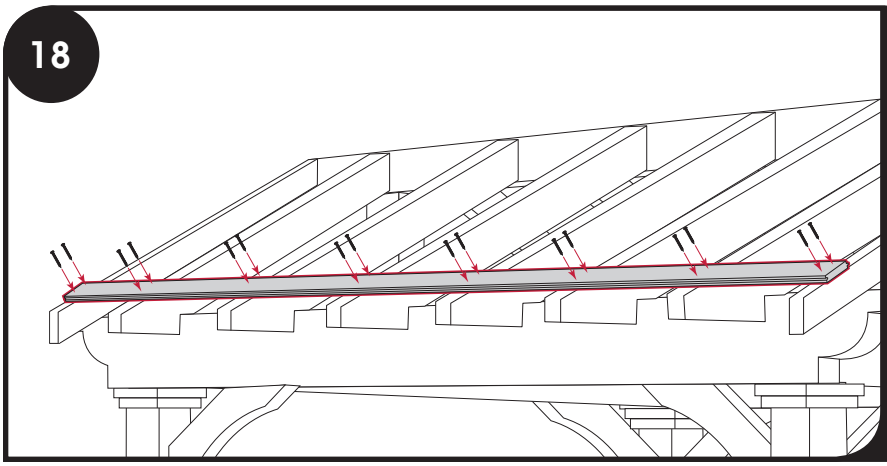

Install the 1x6 tongue and groove boards. On larger pavilions they will be spliced. Turn the rough side down. Keep flush on bottom of rafter. Fasten with two 2" screws into each rafter.

## 19

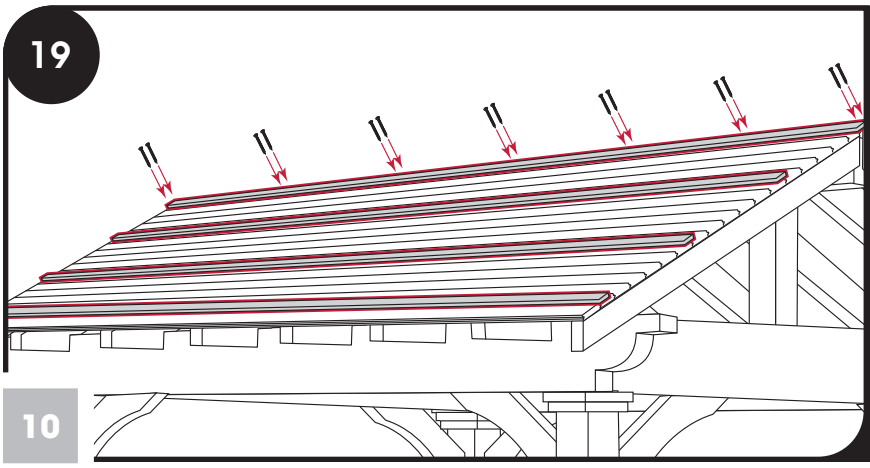

**NOTE: This step only applies to structures with metal roofs. If you do not have a metal roof skip this step.**

Fasten horizontal roof lath pieces with two 2" screws at each rafter. Place the first piece of lath directly on top of the lowest decking board. Space each lath board roughly 20-24" apart with the longest piece placed at the bottom and the shortest piece at the top. (Lath boards may need to be cut to length.)

20

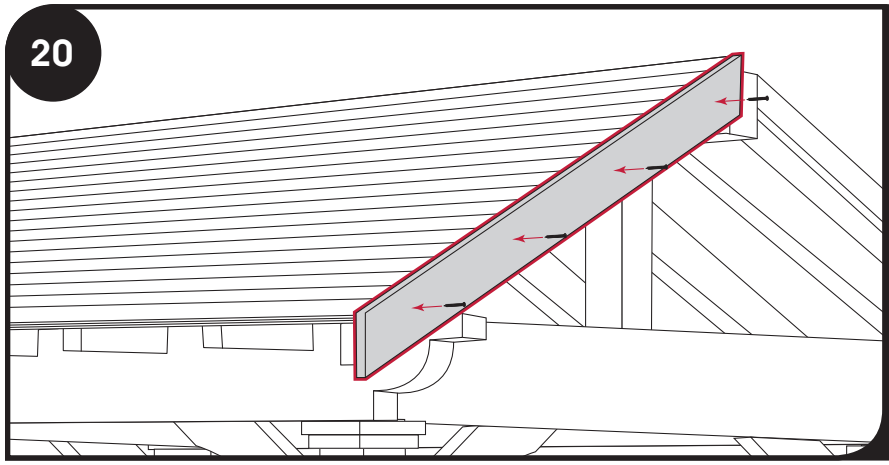

The next step will be installing the gable fascia. Keep it flush on top of 1x3s. If you have asphalt shingles, keep it flush with the tongue & groove. Put it right in the center of ridge beam. Fasten with one 2½" screw every 24".

If you have a electrical package, please see page 23.

21

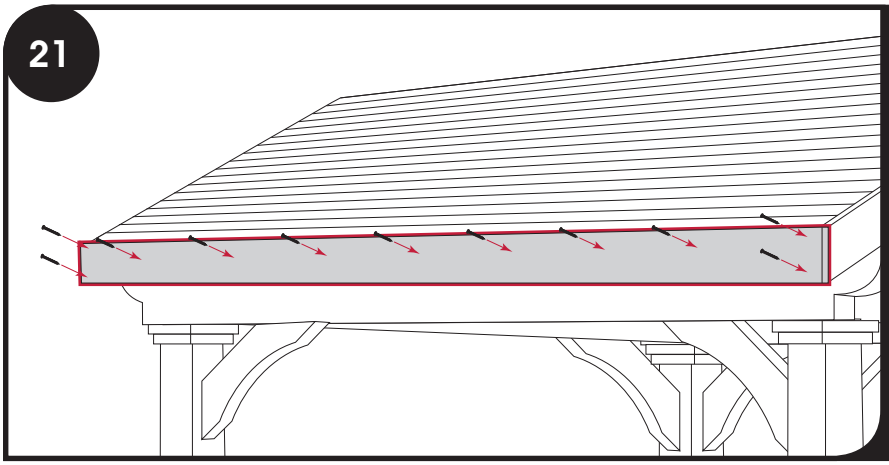

Once you have all four pieces of gable trim up, install the fascia. These might be spliced. Just match the letters on the inside (A goes with A). Fasten into gable fascia with two 2½" screws. Then one 2½" screw every 24". You might have to cut these if too long.

22

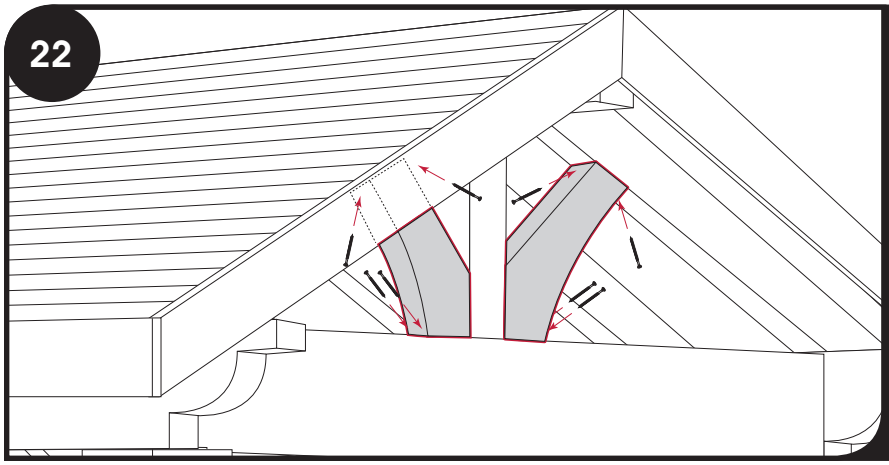

Install the decorative gable trim on each side of the ridge beam support. You might need to cut these down if they are too long. Fasten with four 3½" screws, two on the top and two on the bottom as shown.

You are now ready for your roofing material.
See page 17 for metal – or – page 19 for asphalt.

GAZEBO JOE'S®

# Heavy-Duty Anchors for High Wind

1

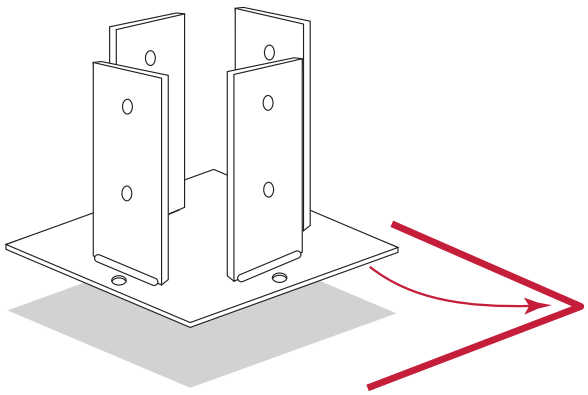

Set the outside edges of the brackets at the pencil marks you made from the template.

2

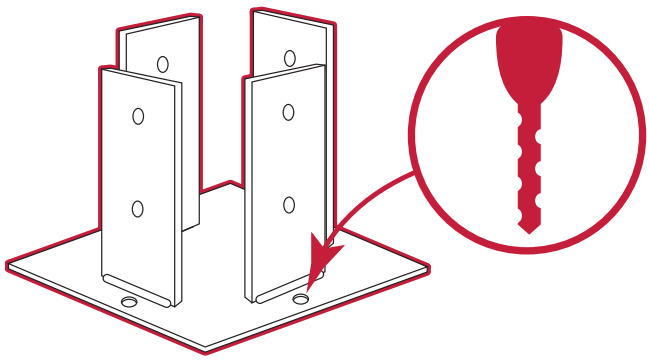

Be sure your bracket is sitting correctly against the pencil marks. Using the bracket base as a template, drill a hole using a ½" masonry bit about 1" longer than the masonry bolt in each of the four anchor bolt holes. Clear all concrete dust from the holes.

3

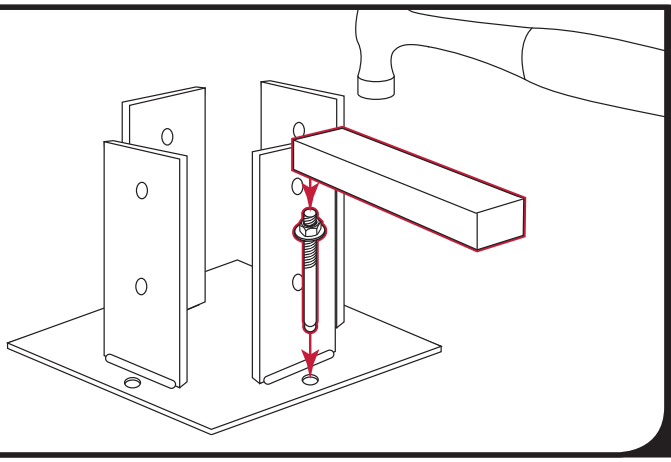

Install the washer and nut on the bolt so that only a few threads are showing above the nut. Using a piece of wood to protect the threads, tap the anchor bolt into the hole with a hammer until about ¾" of threads are showing. Tighten the nut and the base of the bolt will expand and anchor the entire assembly to the ground. Continue on with the rest of the anchor bolts.

4

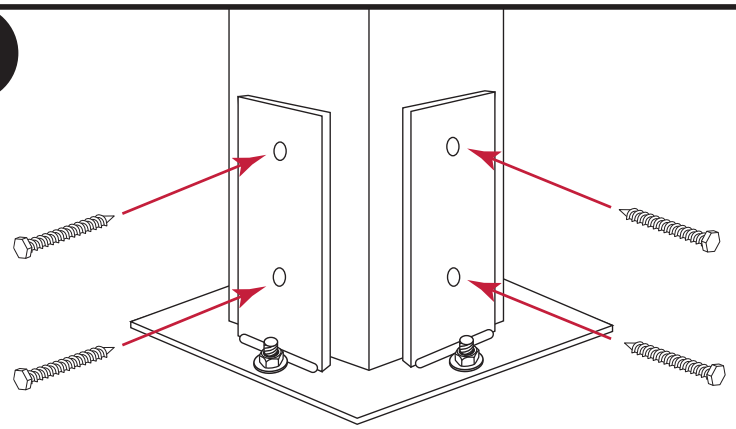

Place the post into the bracket. Make sure you turn it the correct way. There should be a 3" notch and 1" notch on top of the post. The 3" notch gets turned to the outside to receive the header beam. Level the post on both sides, then fasten 8½" x 3" lag screws into the post. Repeat this step with all posts. Turn to page 6 for your next assembly step.

GAZEBO JOE'S®

# Return Gable Assembly

1

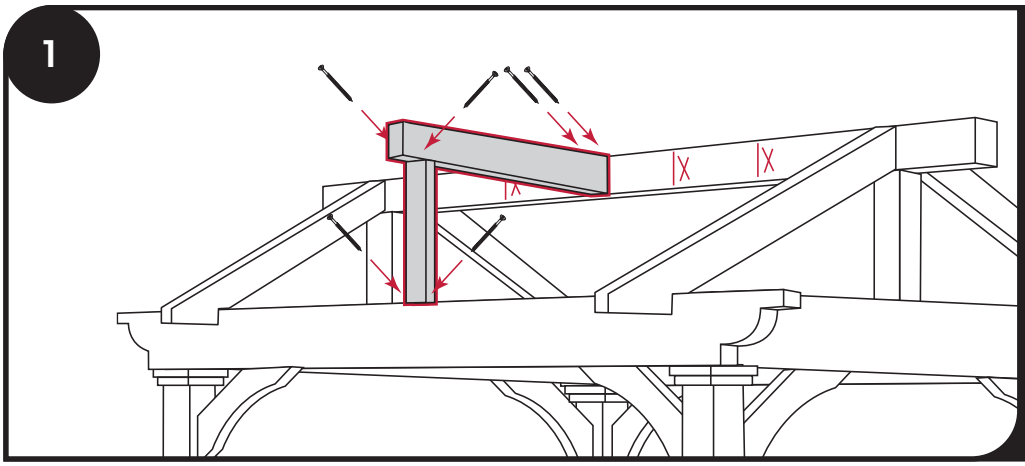

Attach the middle upright, centered on the beam. Attach the ridge board to the upright and attach the other end to the ridge board.

2

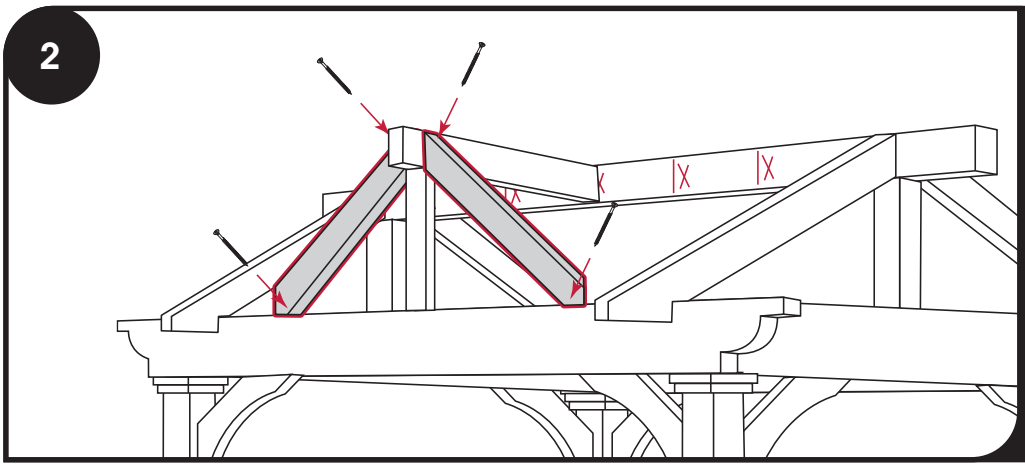

Add the outer rafters. (NOTE: these will not have the bird's mouth cuts.) They will set on the beam and line up with the outside edge of the beam, fasten with four 3½" screws into the ridge beam.

3

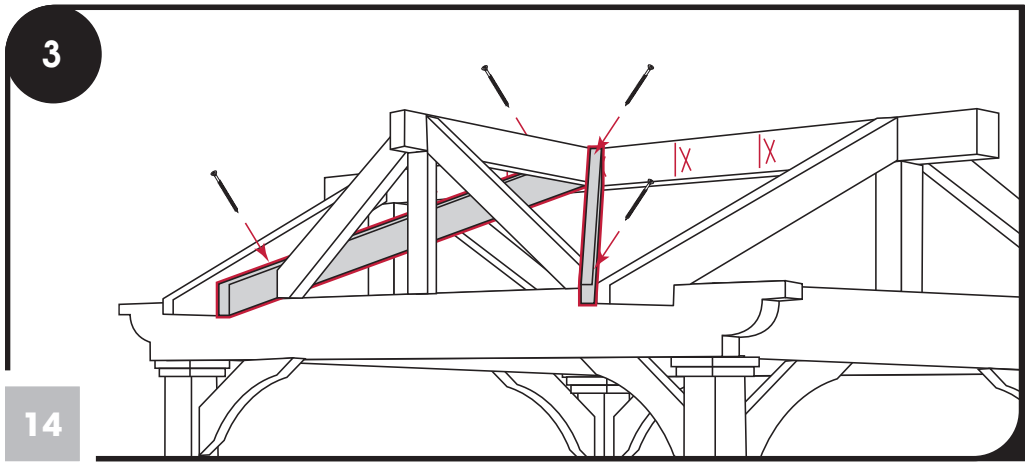

Identify the valley beams. These will form a "V" from the center of the main ridge beam and will align to the ends of the outer rafters. Fasten with 3½" screws.

4

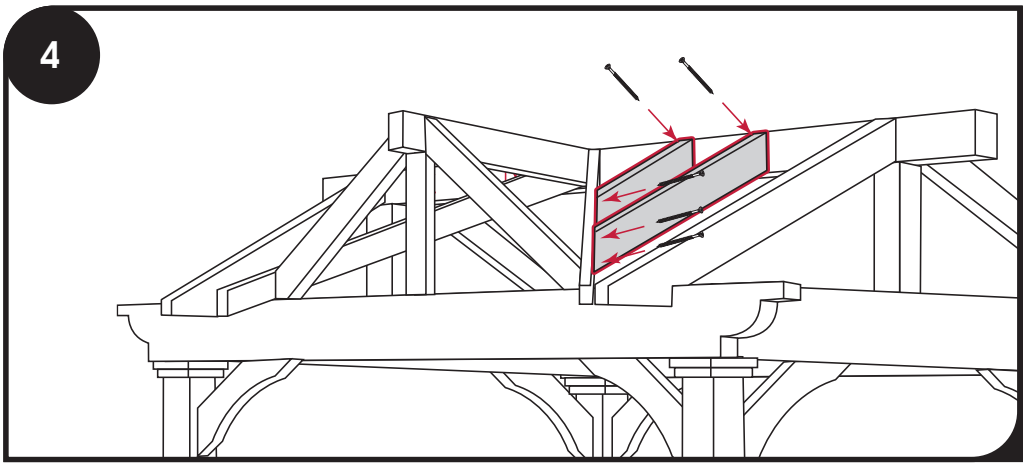

Install the jack rafters on the main roof. Locations will be marked and all are pre-cut. Do this on both sides.

5

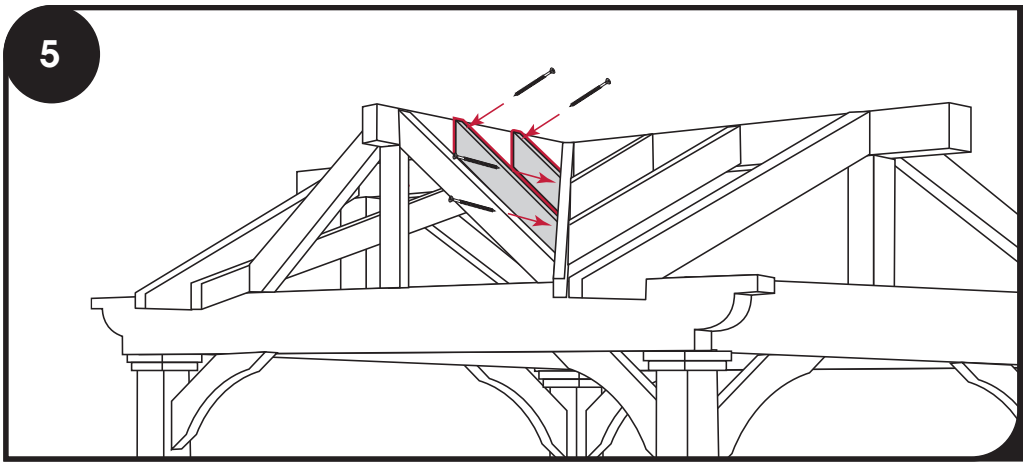

Install the jack rafters on the dormer in the same way.

6

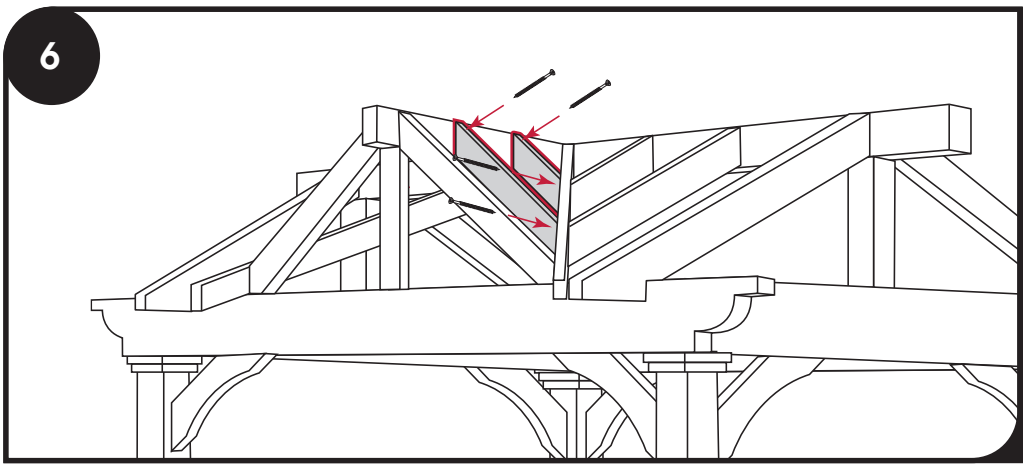

Install Tongue and Groove Decking

7

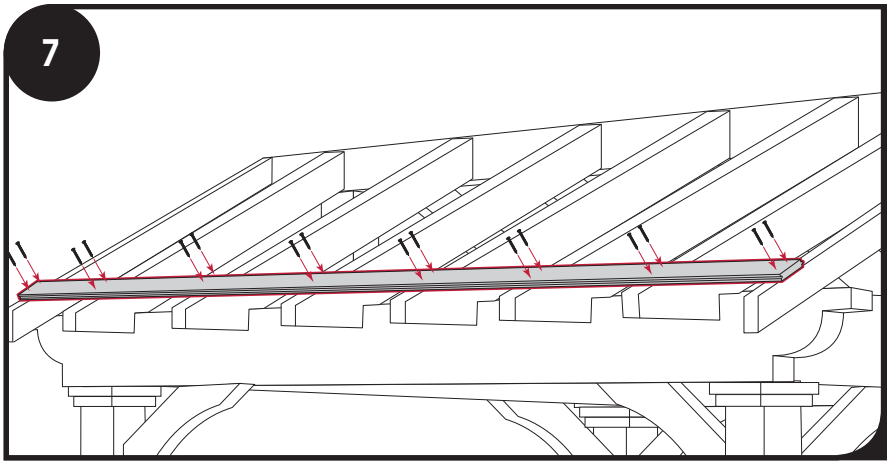

Install the 1x6 tongue and groove boards. On larger pavilions they will be spliced. Turn the rough side down. Keep flush on bottom of rafter. Fasten with two 2" screws into each rafter.

8

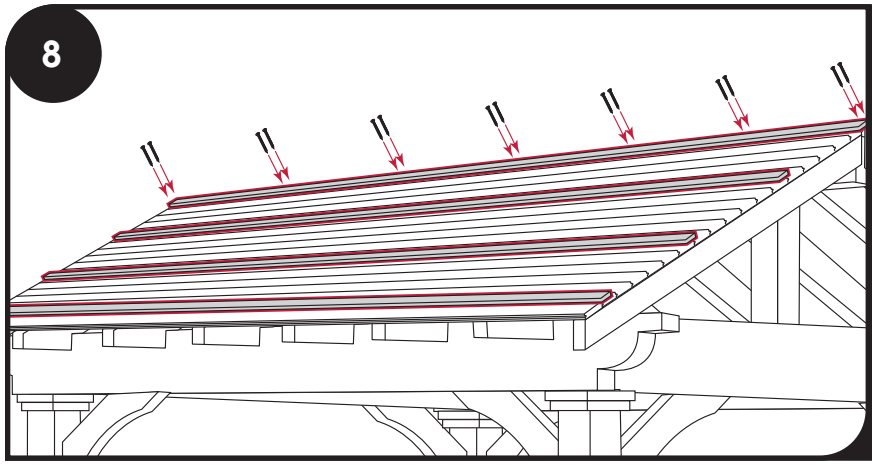

**NOTE: This step only applies to structures with metal roofs. If you do not have a metal roof skip this step.**

Fasten horizontal roof lath pieces with two 2" screws at each rafter. Place the first piece of lath directly on top of the lowest decking board. Space each lath board roughly 20-24" apart with the longest piece placed at the bottom and the shortest piece at the top. (Lath boards may need to be cut to length.)

9

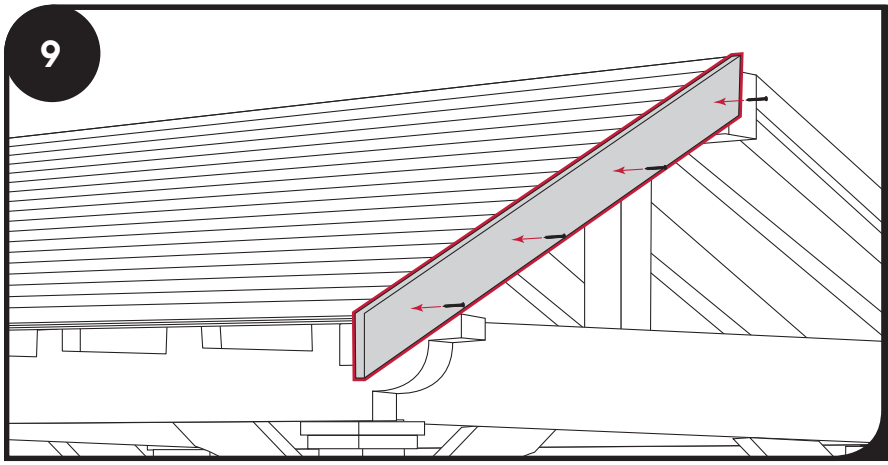

The next step will be installing the gable fascia. Keep it flush on top of 1x3s. If you have asphalt shingles, keep it flush with the tongue & groove. Put it right in the center of ridge beam. Fasten with one 2½" screw every 24".

10

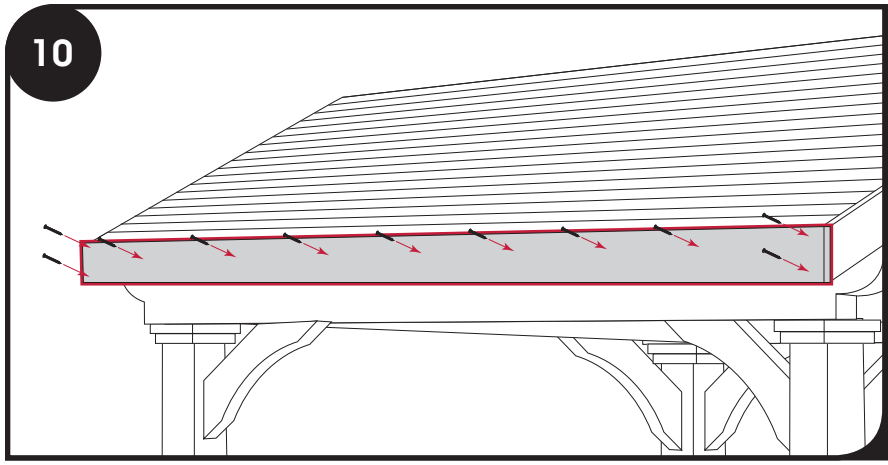

Once you have all four pieces of gable trim up, install the fascia. These might be spliced. Just match the letters on the inside (A goes with A). Fasten into gable fascia with two 2½" screws. Then one 2½" screw every 24". You might have to cut these if too long.

You are now ready for your roofing material.

See page 17 for metal – or – page 19 for asphalt

GAZEBO JOE'S®

# Roof Option 1
# Installing a Metal Roof

1

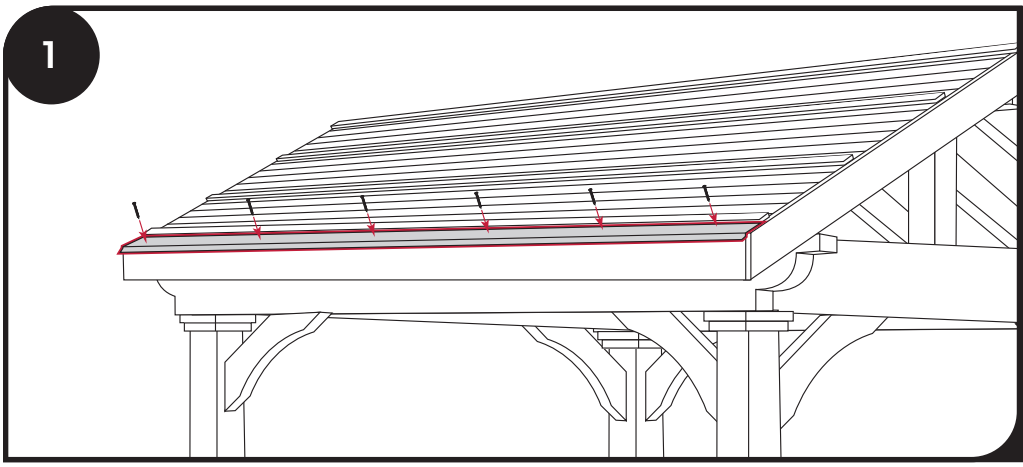

Install the drip edge over the bottom lath piece. Cut each piece to length. Fasten with 1" screws, staples or nails.

2

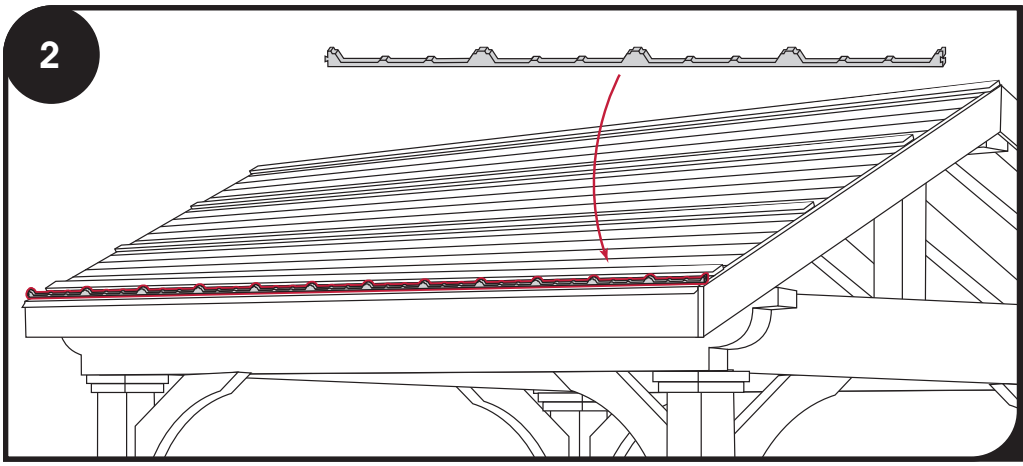

Install the foam ribbing roughly 1½"-2" from the bottom of the drip edge. (NOTE: be sure to install the proper foam ribbing. One set is designed to fit below the metal roofing and the other set is for on top of the roofing.) Do not stretch the ribbing because the grooves of the roof must line up with the ribs.

3

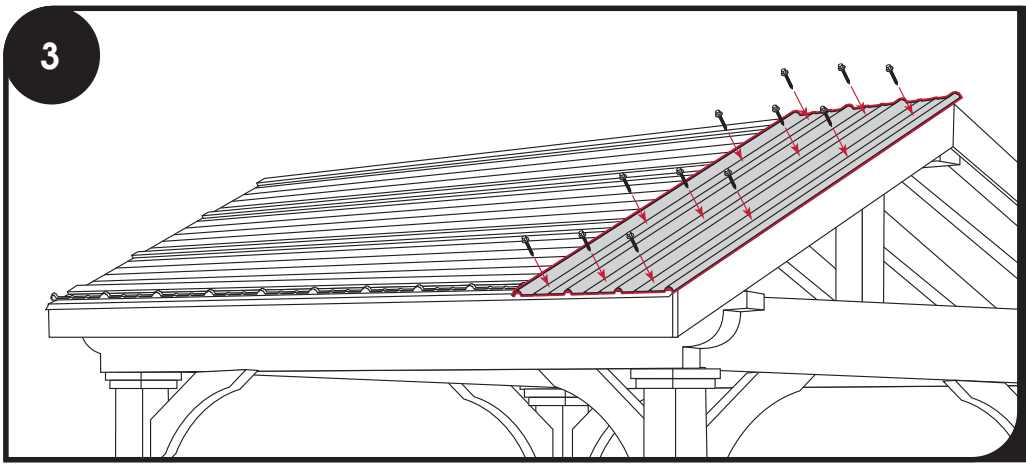

Install the tin, starting at the right side and moving left. Ensure the first piece is installed squarely. Keep the bottom of the tin flush with the drip edge. Fasten with 1" screws. The first piece will have three screws at every lath.

4

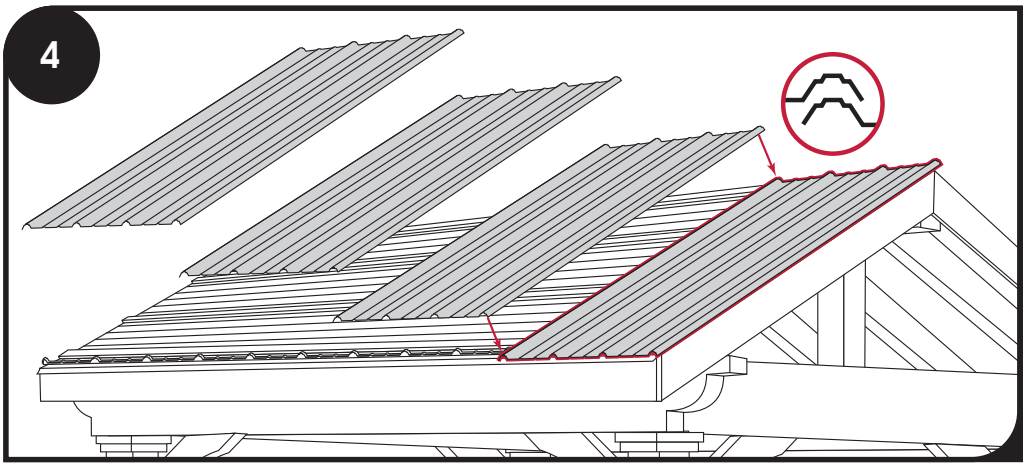

The next piece must properly overlap on the far edge of the first piece. The last piece of metal roofing may need to be cut to size to be flush with the edge of the fascia.

5

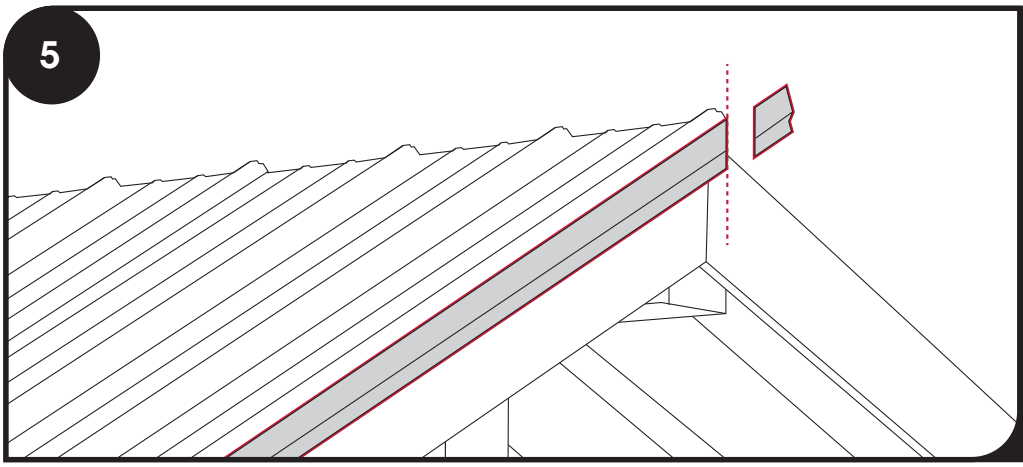

Once you have all the metal roofing installed, hold the gable end trim in place to mark the upper end of the trim that will need to be cut to meet flush with the other side.

6

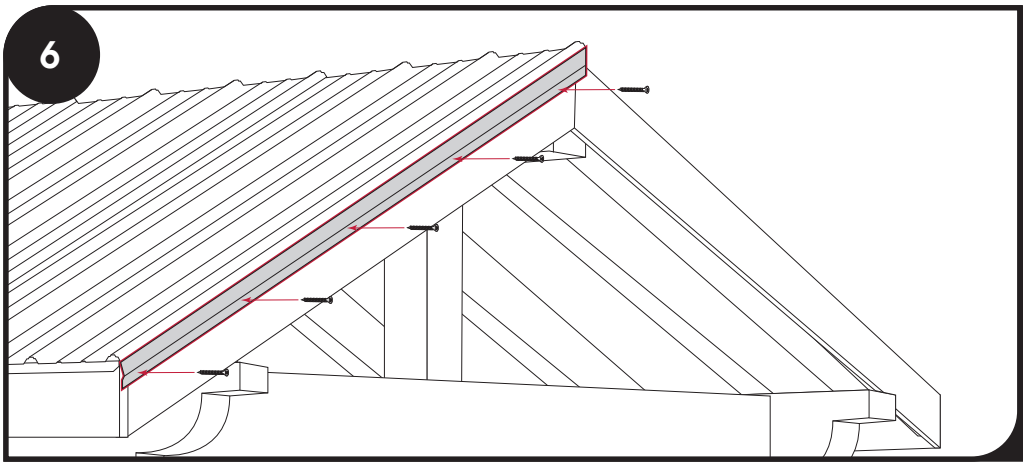

Once the gable end trim are cut to angle, attach the trim piece with one 1" screw into the fascia board every 24" of the open gable end. Next, fasten the top of the same trim piece with 1" screws at every roof lath.

7

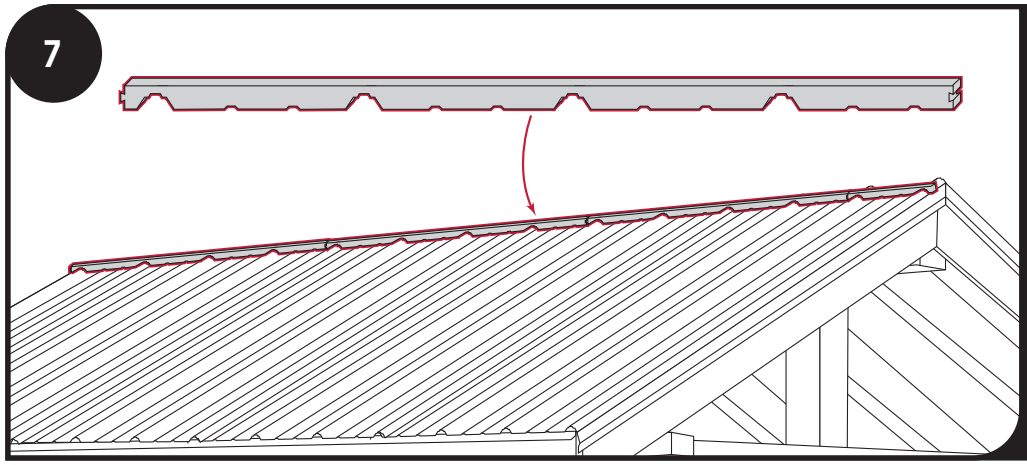

Install the foam ribbing along the peak of the roof roughly 1½" from the peak. Be careful to fit this to the metal roof profile and do not stretch it. Be sure this foam will be covered by the ridge cap when it is installed.

8

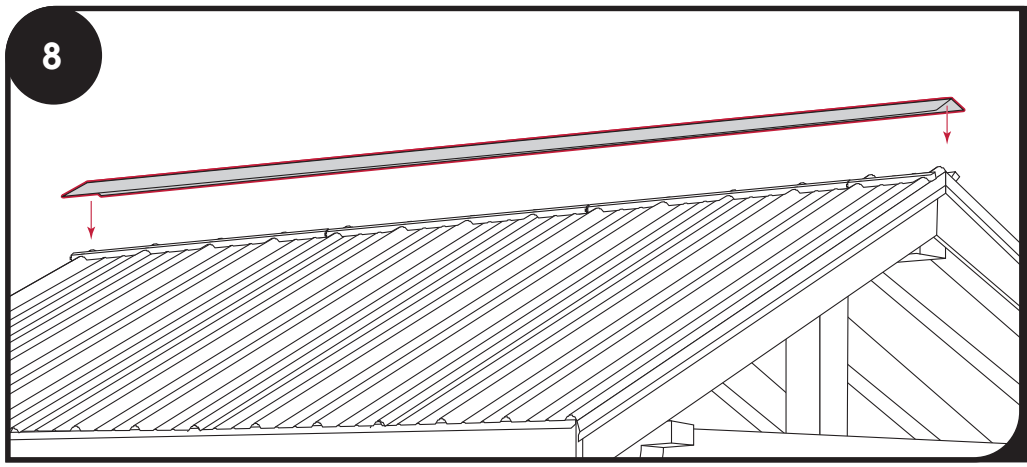

Place the ridge cap flush with the previously installed trim, fastening every 24" with 1½" screws on both sides.

GAZEBO JOE'S®

# Roof Option 2
# Installing an Asphalt Roof

NOTE: Before beginning, consult instructions on shingle packaging. We do not include fasteners for asphalt shingles with our kits. This is because some states require different fasteners than others, and because some customers have different tools than others (hammer, nail gun, pneumatic stapler, hammer tacker, etc.) Please use shallow depth fasteners to fasten your shingles to your 1x6 roof decking. For example: ⅝" long roofing nails or roofing staples with ⅝" leg and 1" wide crown. These fasteners will certainly be sufficient to hold the shingles to your roof in high storm winds and will not pierce the bottom surface of the 1x6 decking.

DO NOT PLACE PLYWOOD, OSB (ORIENTED STRAND BOARD) OR OTHER DECKING ON THE TOP OF THE 1X6 TONGUE AND GROOVE. It is not necessary and is too heavy for your structure.

1

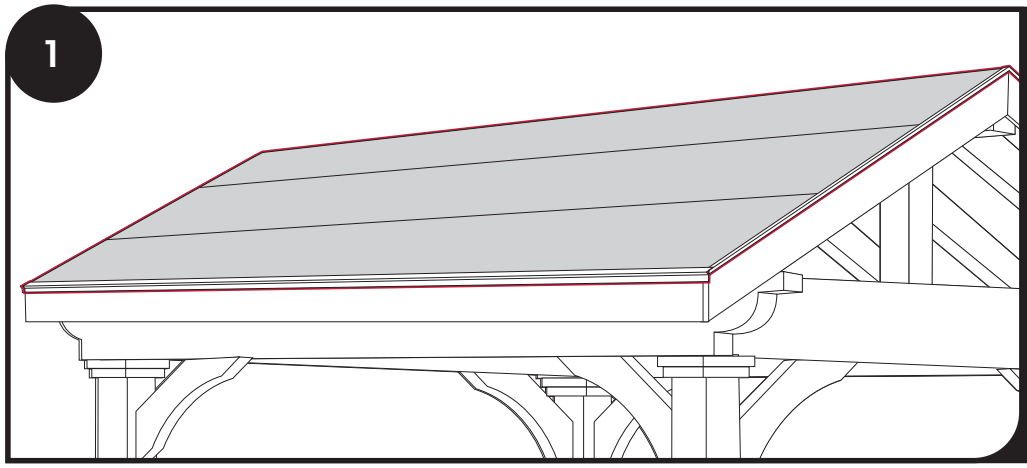

Install roof paper. Start at the bottom and be sure to overlap 2" as you work upward. Install the drip edge to the edges of the roof using a fastener every 16".

2

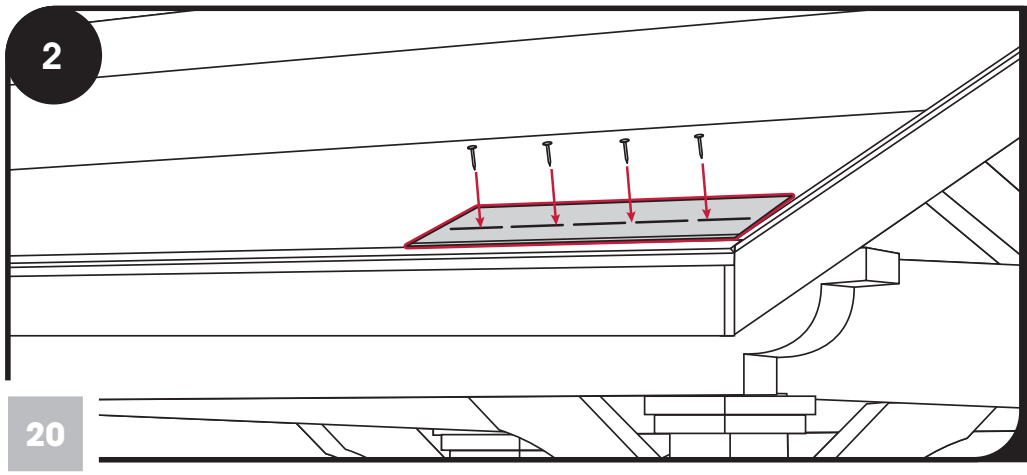

To install the first row of shingles, spin your shingles so the tabs face the peak and flip them over. Attach to roof using four 5/8" roofing nails. Place nails approximately 3" from bottom.

3

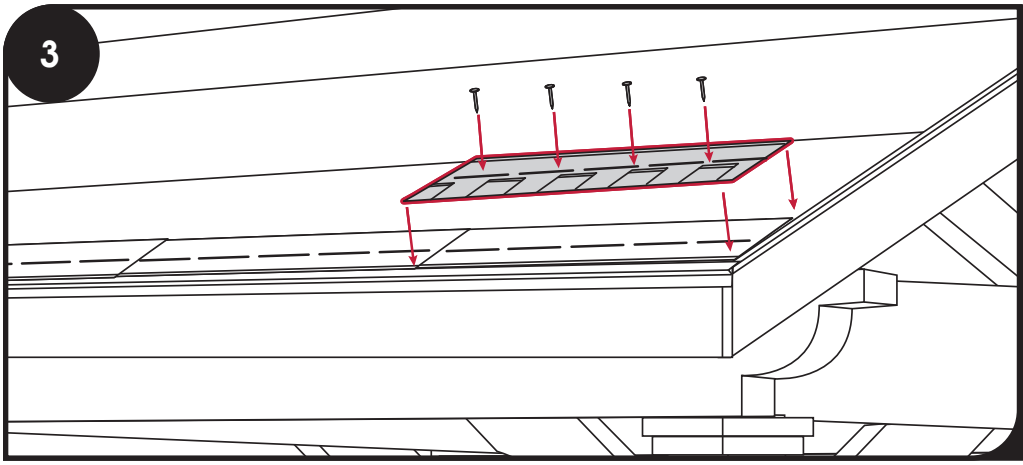

Use four ⅝" roofing nails and attach to roof through shingle at the center line marked on the shingle. Do not fasten below the line or your fasteners will be exposed.

4

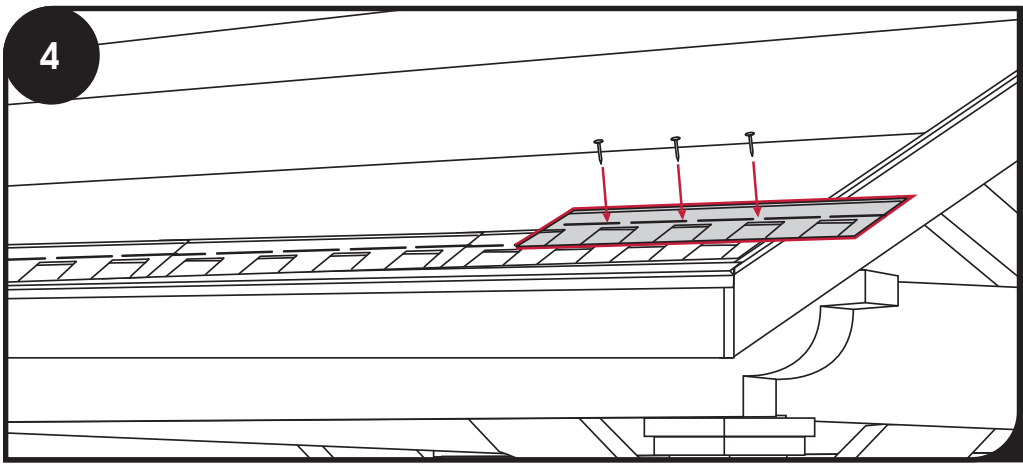

Start the second row, line up the bottom edge of the shingles with the architectural line on the shingle below. Attach the second row of shingles to the roof using a ⅝" roofing nails or a power stapler.
Do not use long nails or staples that protrude through the 1x6 roof decking.

5

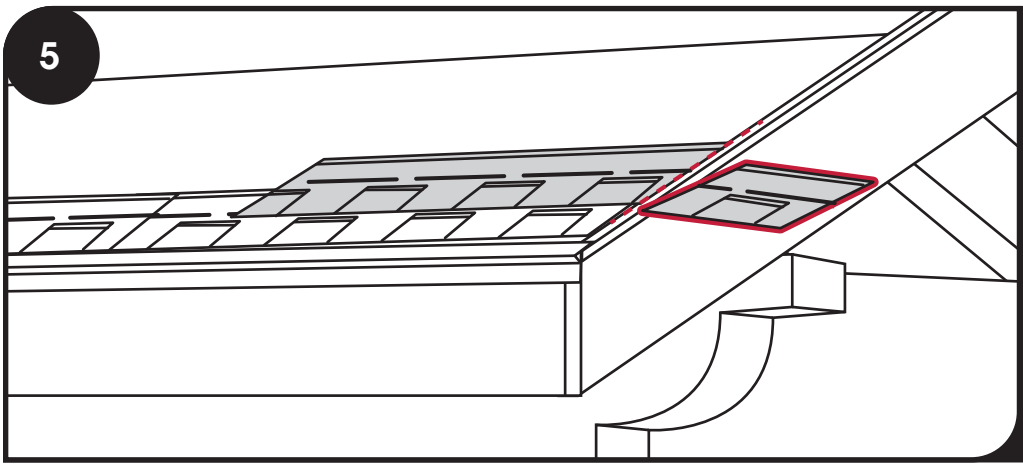

Trim overhanging shingles with a scissors or utility knife. When using a knife cut from the bottom side.

6

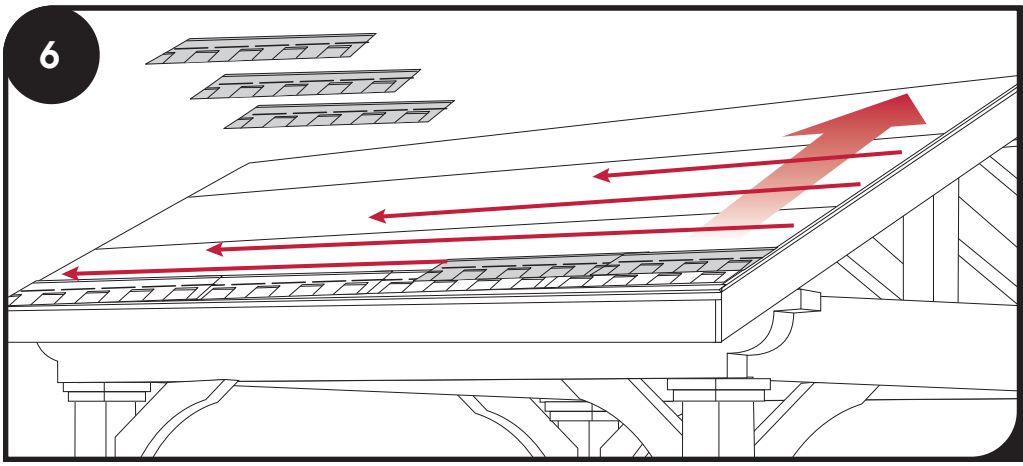

Work across the roof and then up the roof to the peak.

7

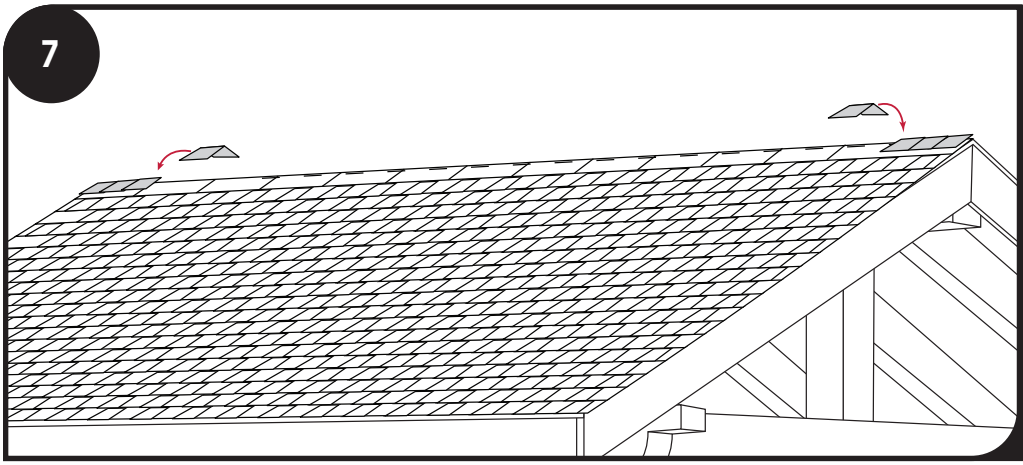

Start at both ends of the ridge and work toward the center of the ridge.

8

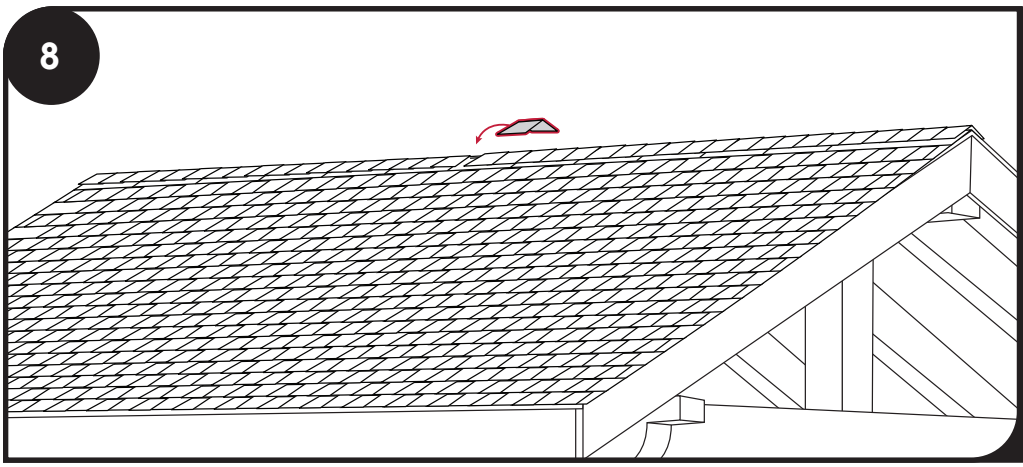

The last shingle will need cut in half and will bring the ridge together

# Electrical Package

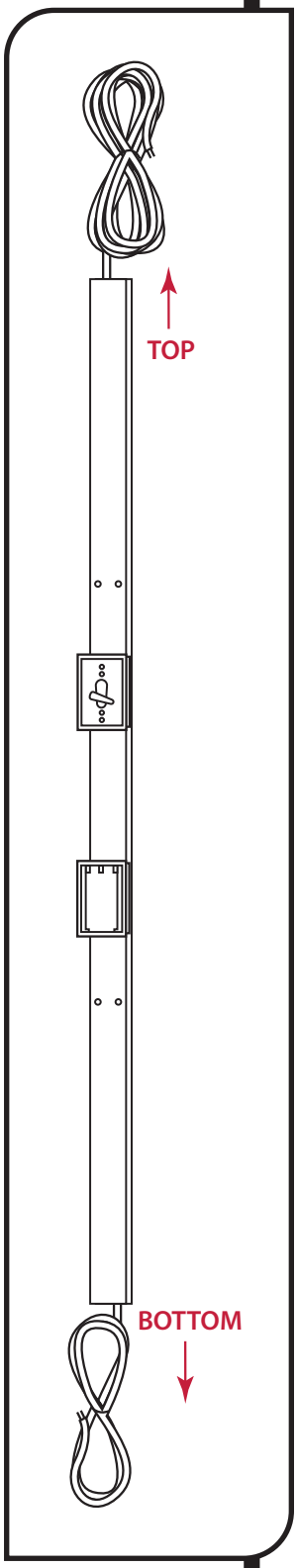


**NOTE: a qualified electrician is required to install any electrical work beyond the provided steps and roughed-in wiring package.**

**1.** Locate the wire package and install it on one of the inside corner posts. Unless you ordered a pavilion with a center post, you may install where needed.

**2.** The short length of wire is the bottom feed wire. Make sure the wire is positioned properly at the bottom of the electrical trim piece.

**3.** Push the longest wire up to the top of the header and run it up through the roof. You should be able to push the wire between the tongue and groove and gable fascia. If not, you may need to make a notch for the wire to pass through.

**4.** At the roof peak, run the wire across the top of the ridge beam. Drill a hole down though your ridge beam wherever you want your light or ceiling fan to be installed. Run the wire down through this hole.

**5.** When the rough wire is in place, fasten the electrical trim piece to the post. Be sure not to screw into the wire. Fasten with 2½" screws. Continue with page 11 step 21.